JVC

SERVICE MANUAL

COMPACT VHS CAMCORDER

GR-AX460EA/AX460EE/ AX627EG/AX827EG

Compact VHS

VHS C PAL

Regarding service information other than these sections, refer to the GR-AX260EG/360EG/460EG service manual (No. 86278).
Also, be sure to note important safety precautions provided in the service manual.

SPECIFICATIONS *(The specifications shown pertain specifically to the model GR-AX627EG/AX827EG)*

GENERAL

Format	: VHS PAL standard
Power source	: DC 6 V ⎓
Power consumption	
GR-AX827 light on	: 8.9 W
GR-AX827 light off	: 5.9 W
GR-AX427	: 5.9 W
GR-AX627 light on	: 8.7 W
GR-AX627 light off	: 5.7 W
GR-AX327	: 5.7 W
Signal system	: PAL-type
Video recording system	
Luminance	: FM recording
Colour	: Converted sub-carrier direct recording Conforms to VHS standard
Cassette	: VHS C cassette
Tape speed	
SP	: 23.39 mm/sec
LP	: 11.70 mm/sec
Recording time Max.	
SP	: 45 minutes (with EC-45 cassette)
LP	: 90 minutes (with EC-45 cassette)
Operating temperature	: 0°C to +40°C
Operating humidity	: 35% to 80%
Storage temperature	: –20°C to +50°C
Weight	
GR-AX827	: Approx. 760 g
GR-AX627	: Approx. 780 g
GR-AX427	: Approx. 750 g
GR-AX327	: Approx. 770 g
Dimensions	
GR-AX827/AX427	: 109 (W) x 113 (H) x 206 (D) mm
GR-AX627/AX327	: 109 (W) x 113 (H) x 226 (D) mm

CAMERA

Pick up	: 1/4" format CCD
Minimum required illumination	: 2 lx (F1.2)
Illumination range	: 2 to 100,000 lx
Lens	: F1.2, f = 4.1 to 57.4 mm, 14:1 power zoom lens with auto iris and macro control, filter diameter 46 mm
Viewfinder	: Electronic viewfinder • with 0.55" colour LCD (GR-AX827/AX427) • with 0.5" black/white CRT (GR-AX627/AX327)
White balance adjustment	: Auto/Manual adjustment

VIDEO

Output	: 1 Vp-p, 75 ohms, unbalanced (via VIDEO out connector)

AUDIO

Output	: –8 dBs, 1 k-ohm (via AUDIO out connector)

AC POWER ADAPTER/BATTERY CHARGER (AA-V11EG/EK) SPECIFICATIONS

Power requirement	: AC 110 to 240 V ∿, 50/60 Hz
Power consumption	: 23 W
Output	: DC 8.5 V ⎓, 1.3 A (CHARGE), DC 6.3 V ⎓, 1.8 A (VTR)
Charging system	: Constant current, peak detection, timer controlled
Dimensions	: 150 (W) x 42 (H) x 68 (D) mm
Weight	
AA-V11EG	: Approx. 350 g
AA-V11EK	: Approx. 400 g

CASSETTE ADAPTER (C-P7U) SPECIFICATIONS

Dimensions	: 188 (W) x 25 (H) x 104 (D) mm
Weight	: Approx. 240 g
Accessory	: "R6 (AA)"-size battery x 1

Provided Accessories ..... ☞ pg. 3

Optional Accessories

- **Battery Packs BN-V12U, BN-V22U, BN-V25U**
- **Car Battery Charger BH-V3E**
- **Battery Charger BH-VC10EG**
- **Car Battery Cord AP-V7E**
- **RF Unit RF-V5E**
- **Wireless Remote Control Unit RM-V704U**
- **Wired Remote Control Unit RM-V20U**
- **Compact VHS-C Cassettes EC-45/30**
- **Active Carrying Bag CB-V7U**

* Some acccessories are not available in some areas. Please consult your nearest JVC dealer for details on accessories and their availability.

E.&O.E.Design and specifications subject to change without notice.

COPYRIGHT © 1996 VICTOR COMPANY OF JAPAN, LTD.

No. 86286
March 1996

TABLE OF CONTENTS

4. CHARTS AND DIAGRAMS
4.2 POWER SYSTEM BLOCK DIAGRAM 4-5
4.7 LINEAR AUDIO SCHEMATIC DIAGRAM 4-17
4.8 PROCESS AND Y/C SCHEMATIC DIAGRAM 4-19
4.15 CCD AND UPPER DRAM CIRCUIT BOARDS 4-39

5. PARTS LIST
5.1 PACKING ASSEMBLY <M1> 5-1

The following table lists the different points between models [GR-AX460EA, GR-AX460EE, GR-AX627EG(S) and GR-AX827EG(SH)] in this series.

ITEM \ MODEL	AX460EA	AX460EE	AX627EG(S)	AX827EG(SH)
ELECTRONIC VIEWFINDER	black/white	←	←	color
AC P ADAPTER	AA-V11EA	AA-V11EG	←	AA-V11EK
REMOTE CONTROLLER	RM-V705U	RM-V704U	RM-V705U	←
AV CABLE	×	○	○	○
CONVERSION PLUG	×	×	○	×

Notes : · Mark ← is same as left.
· Mark ○ is used. · Mark × is not used.

The following table lists the different points between models [GR-AX460EG, GR-AX460EA, GR-AX460EE, GR-AX627EG(S) and GR-AX827EG(SH)] in this series.

PACKING ASSEMBLY <M1>

REF.NO.	ITEM \ MODEL	AX460EG	AX460EA	AX460EE	AX627EG(S)	AX827EG(SH)
2	PACKING CASE	YQ32238-14	YQ32238-41-7	YQ32238-58-7	YQ32238-42-7	YQ32238-43-7
3	CUSHION	YQ32239-1-5	YQ32330	←	←	←
4	POLY BAG	YQM30061-2	←	YQM30061	←	←
⚠ 5	INSTRUCTIONS	YU30052-562 YU30052-563 YU30052-564 YU30052-565 YU30052-566	YU30052-543	YU30052-580 YU30052-581 YU30052-582	YU30052-545	←
7	CABLE ASSY,A/V	PEAC0362-150	—	PEAC0362-150	←	←
14	REMOCON	YQ20710C	YQ20932A	YQ20710C	YQ20932A	←
15	WARRANTY CARD	—	BT-56001-1	—	—	—
16	SER. NET CARD	—	BT-56002-1	—	—	—
17	INST. SHEET	—	—	—	PU59932	—
18	CONVERSION PLUG	—	—	—	PEMC1012-02	—

FINAL ASSEMBLY <M2>

REF.NO.	ITEM \ MODEL	AX460EG	AX460EA	AX460EE	AX627EG(S)	AX827EG(SH)
⚠101	LOWER CASE ASSY	YQ10575F	YQ10575G	←	←	←
⚠112	CASS. COVER ASSY	YQ10580H-3	YQ10580L-3	YQ10580H-3	YQ10580L-3	←
117	TOP COVER(ASSY)	YQ32302S	YQ20904-13	YQ20904-11	YQ20904-24	YQ20904-25

MECHANISM ASSEMBLY <M3>

REF.NO.	ITEM \ MODEL	AX460EG	AX460EA	AX460EE	AX627EG(S)	AX827EG(SH)
468	DRUM ASSY	YDV2066A	YDV2065A	←	←	←
468A	UPPER DRUM ASSY	YDV2067B	YDV2067D	←	←	←

Notes : · Mark — is not used.
· Mark ← is same as left.

The following table lists the different points between models [GR-AX460EG, GR-AX460EA, GR-AX460EE and GR-AX627EG(S)] [GR-AX360EG and GR-AX827EG(SH)] in this series.

ELECTRONIC VIEWFINDER ASSEMBLY <M4>

REF.NO.	MODEL / ITEM	AX460EG	AX460EA	AX460EE	AX627EG(S)	AX360EG	AX827EG(SH)
–	E.VF ASSY	YQ32236C	←	←	←	YS20782R	←
		YQ32237C	←	←	←		

MAIN BOARD ASSEMBLY <01>

REF.NO.	MODEL / ITEM	AX460EG	AX460EA	AX460EE	AX627EG(S)	AX360EG	AX827EG(SH)
PWBA	MAIN BOARD ASSY	YB10160J-01	YB10160K-01	←	←	YB10160I-01	YB10160O-01
Q406	TRANSISTOR	–	DTC144EE	←	←	–	DTC144EE
Q407	TRANSISTOR	–	DTC144EE	←	←	–	DTC144EE
Q501	TRANSISTOR	–	DTC144EE	←	←	–	DTC144EE
Q507	TRANSISTOR	–	DTC144EE	←	←	–	DTC144EE
D501	DIODE	–	DAN222	←	←	–	DAN222
D504	DIODE	–	–	–	–	DAN222	←
D507	DIODE	–	DAN222	←	←	–	DAN222
R60	RESISTOE	–	–	–	–	NRSA63J-103X	←
R61	RESISTOE	NRSA63J-103X	←	←	←	NRSA63J-152X	←
R62	RESISTOE	–	NRSA63J-103X	←	←	–	NRSA63J-103X
R63	RESISTOE	NRSA63J-103X	–	–	–	NRSA63J-103X	–
R407	RESISTOE	–	NRSA63J-153X	←	←	–	NRSA63J-153X
R415	RESISTOE	NRSA63J-132X	–	–	–	NRSA63J-132X	–
R416	RESISTOE	–	NRSA63J-132X	←	←	–	NRSA63J-132X
R419	RESISTOE	–	NRSA63J-102X	←	←	–	NRSA63J-102X
R423	RESISTOE	–	NRSA63J-682X	←	←	–	NRSA63J-682X
R512	RESISTOE	–	NRSA63J-182X	←	←	–	NRSA63J-182X
R513	RESISTOE	NRSA63J-182X	NRSA63J-102X	←	←	NRSA63J-182X	NRSA63J-102X
R517	RESISTOE	–		←	←	–	NRSA63J-103X
R519	RESISTOE	NRSA63J-102X	NRSA63J-222X	←	←	NRSA63J-102X	NRSA63J-222X
R527	RESISTOE	NRSA63J-102X	←	←	←	NRSA63J-821X	←
R530	RESISTOE	NRSA63J-102X	←	←	←	NRSA63J-821X	←
R539	RESISTOE	–	NRSA63J-182X	←	←	–	NRSA63J-182X
R541	RESISTOE	–	–	–	–	NRSA63J-103X	←
R701	RESISTOE	NRSA63J-821X	NRSA63J-122X	←	←	NRSA63J-821X	NRSA63J-122X
R722	RESISTOE	–	NRSA63J-822X	←	←	–	NRSA63J-822X
R723	RESISTOE	–	NRSA63J-472X	←	←	–	NRSA63J-472X
R731	RESISTOE	NRSA63J-821X	NRSA63J-681X	←	←	NRSA63J-821X	NRSA63J-681X
R732	RESISTOE	NRSA63J-821X	NRSA63J-102X	←	←	NRSA63J-821X	NRSA63J-102X
R733	RESISTOE	NRSA63J-222X	NRSA63J-332X	←	←	NRSA63J-222X	NRSA63J-332X
C406	CAPACITOR	–	NCB31HK-152X	←	←	–	NCB31HK-152X
C413	CAPACITOR	–	NCB31HK-332X	←	←	–	NCB31HK-332X
C515	CAPACITOR	NDC31HJ-560X	NDC31HJ-101X	←	←	NDC31HJ-560X	NDC31HJ-101X
C601	E CAPACITOR	NEA70JM-476X	NBE41AM-226X	←	←	NEA70JM-476X	NBE41AM-226X
C639	CAPACITOR	NDC31HJ-560X	NDC31HJ-101X	←	←	NDC31HJ-560X	NDC31HJ-101X
C640	CAPACITOR	NDC31HJ-221X	NDC31HJ-331X	←	←	NDC31HJ-221X	NDC31HJ-331X
C719	CAPACITOR	NDC31HJ-680X	NDC31HJ-820X	←	←	NDC31HJ-680X	NDC31HJ-820X
L605	COIL	YU41134-271JY	YU41134-221JY	←	←	YU41134-271JY	YU41134-221JY

Notes : ・Mark – is not used.
・Mark ← is same as left.

REAR BOARD ASSEMBLY <02>

REF.NO.	ITEM \ MODEL	AX460EG	AX460EA	AX460EE	AX627EG(S)	AX360EG	AX827EG(SH)
PWBA	REAR BOARD ASSY	YB20750F1-02	←	←	←	YB20750C1-02	YB20750J1-02
⚠CP5	CIRCUIT PROTECTOR	—	—	—	—	ICP-S0.5-X	←

E.VF BOARD ASSEMBLY <10>

REF.NO.	ITEM \ MODEL	AX460EG	AX460EA	AX460EE	AX627EG(S)	AX360EG	AX827EG(SH)
PWBA	E.VF BOARD ASSY	YB20748E-03	←	←	←	—	—

UPPER DRUM BOARD <40>

REF.NO.	ITEM \ MODEL	AX460EG	AX460EA	AX460EE	AX627EG(S)	AX360EG	AX827EG(SH)
PWB	BOARD(UPPER)	YDM3073-2-1	YDM3073-4	←	←	YDM3073-2-1	YDM3073-4

E.VF BOARD ASSEMBLY <50>

REF.NO.	ITEM \ MODEL	AX460EG	AX460EA	AX460EE	AX627EG(S)	AX360EG	AX827EG(SH)
PWBA	E.VF BOARD ASSY	YQ31803-600	←	←	←	—	—

PBL BOARD ASSEMBLY <51>

REF.NO.	ITEM \ MODEL	AX460EG	AX460EA	AX460EE	AX627EG(S)	AX360EG	AX827EG(SH)
PWBA1	PBL BOARD ASSY	—	—	—	—	YB20747B1-01	←

CLD BOARD ASSEMBLY <52>

REF.NO.	ITEM \ MODEL	AX460EG	AX460EA	AX460EE	AX627EG(S)	AX360EG	AX827EG(SH)
PWBA2	CLD BOARD ASSY	—	—	—	—	YB20747B2-01	←

BL BOARD ASSEMBLY <53>

REF.NO.	ITEM \ MODEL	AX460EG	AX460EA	AX460EE	AX627EG(S)	AX360EG	AX827EG(SH)
PWBA3	BL BOARD ASSY	—	—	—	—	YB20747B3-01	←

Notes : ・Mark — is not used.
・Mark ← is same as left.

4.2 POWER SYSTEM BLOCK DIAGRAM

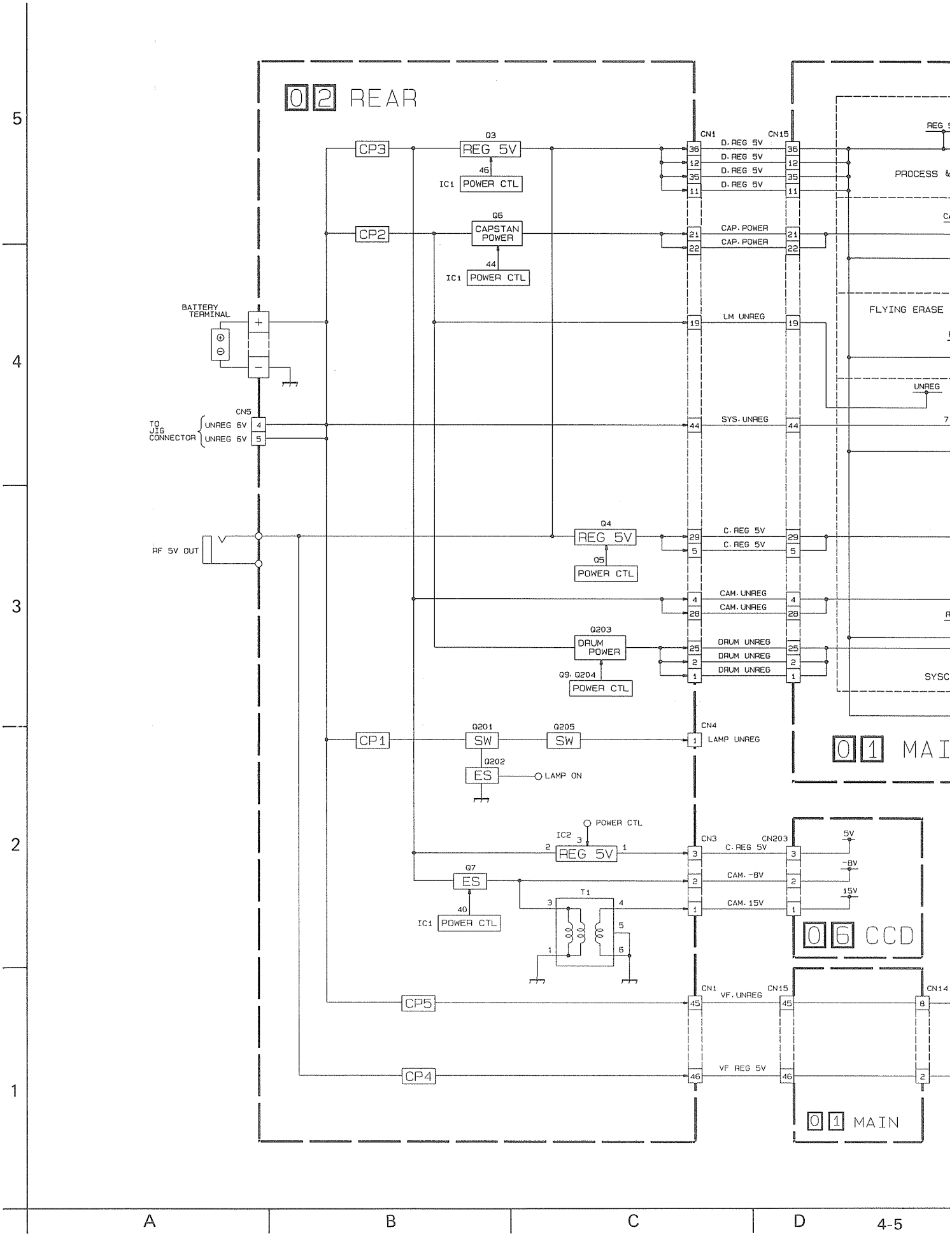

ECTION 4
AND DIAGRAMS

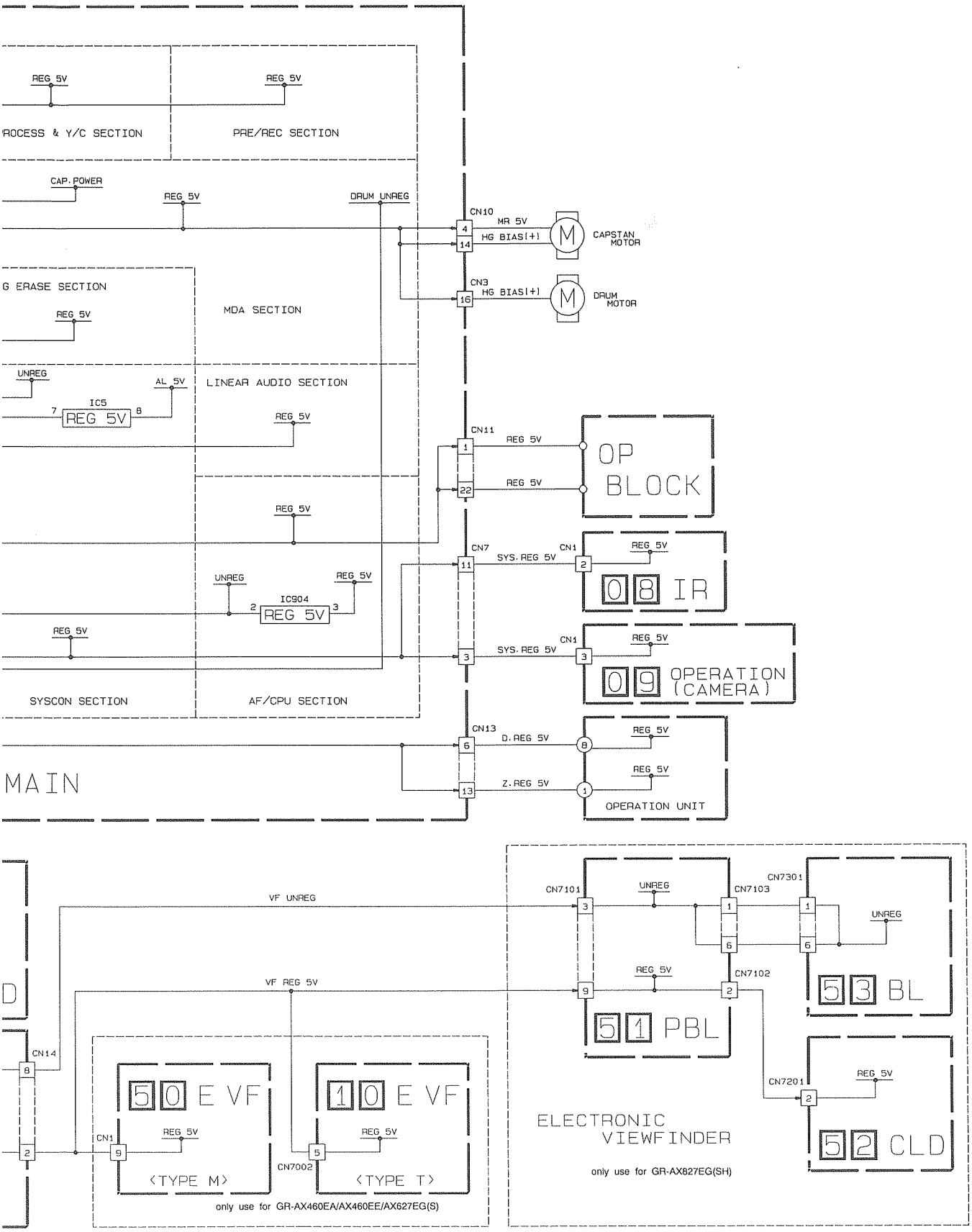

4.7 LINEAR AUDIO SCHEMATIC DIAGRAM

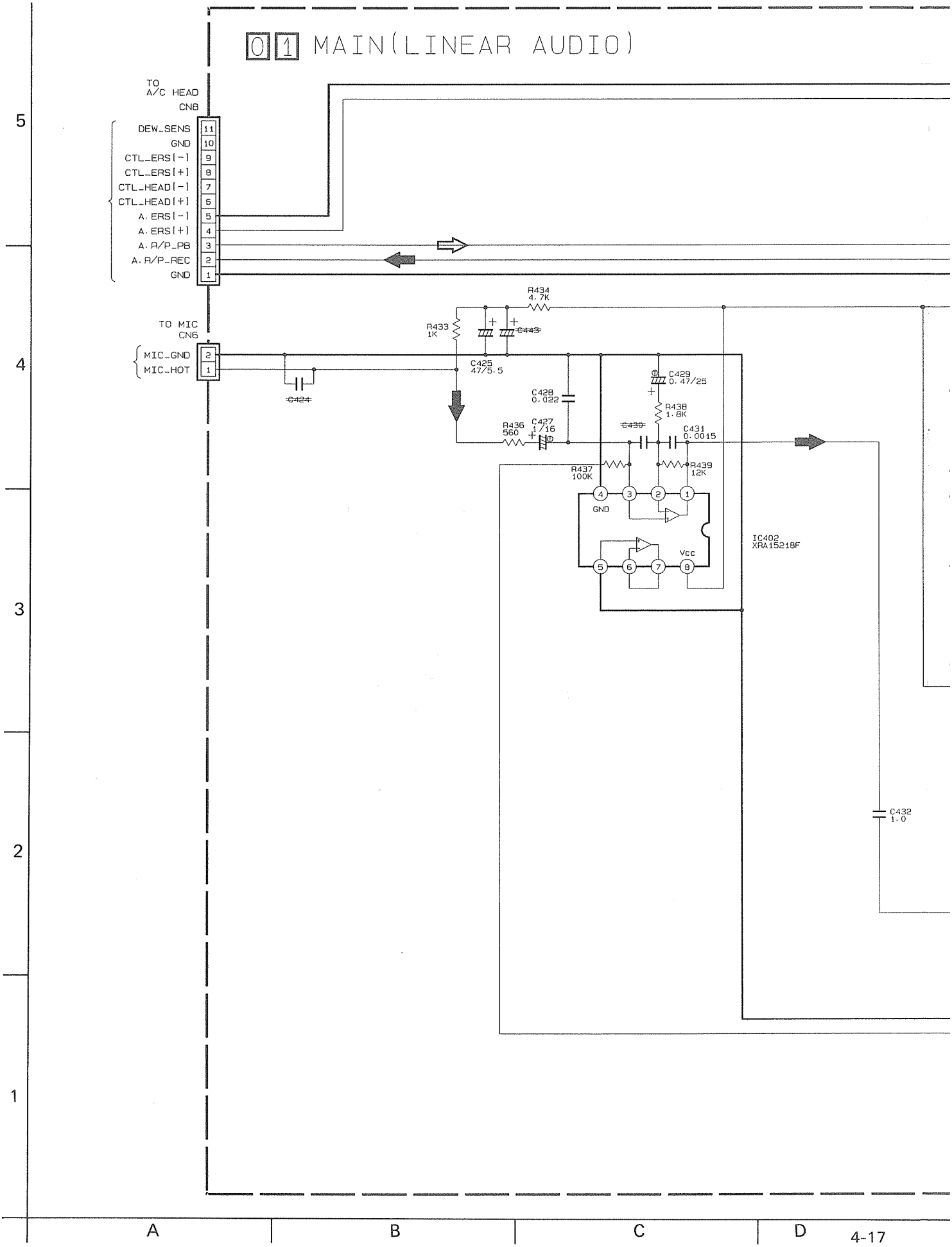

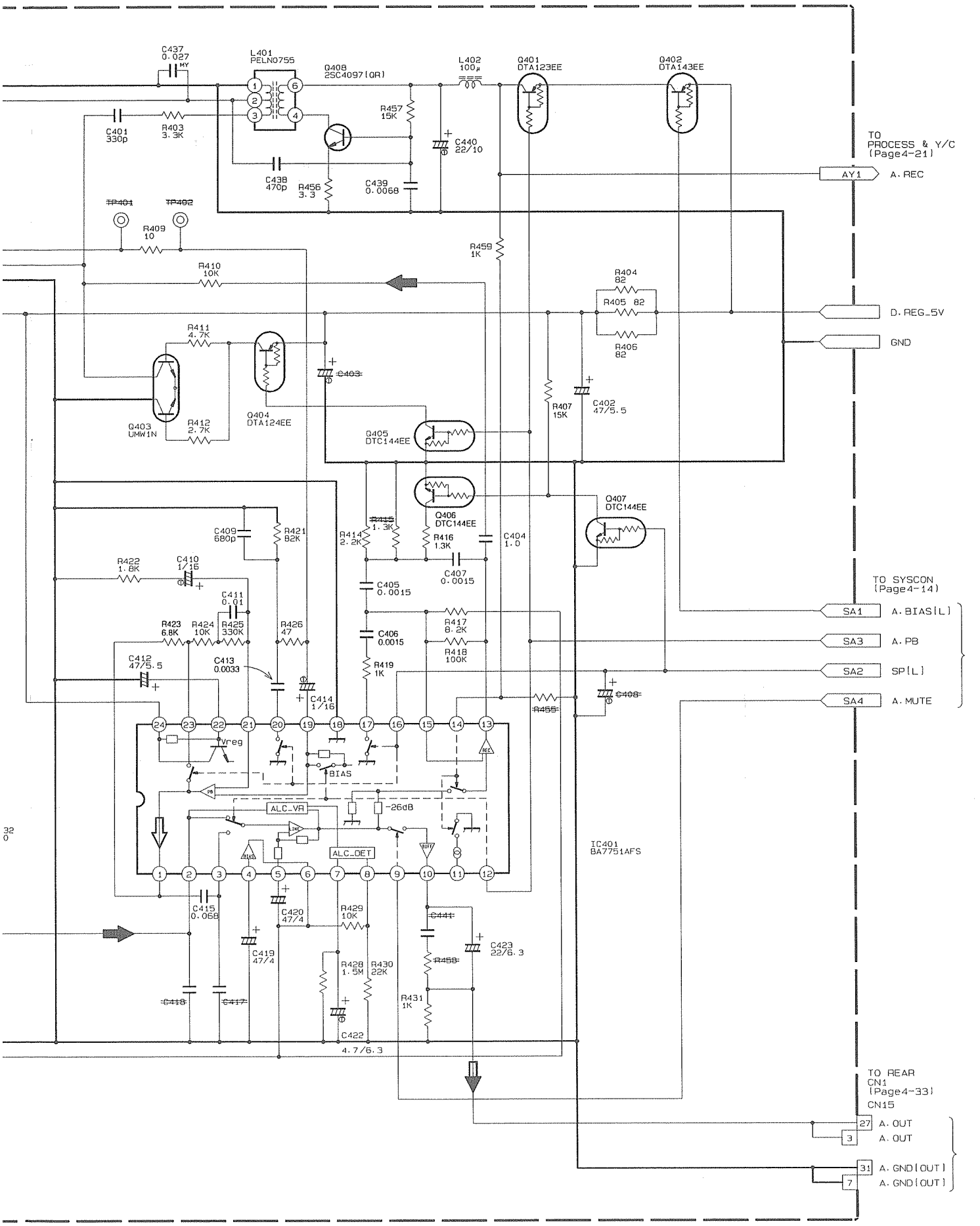
C437
0.027
MY
L401
PELN0755
Q408
2SC4097(QR)
L402
100μ
Q401
DTA123EE
Q402
DTA143EE
C401
330p
R403
3.3K
R457
15K
C440
22/10
C438
470p
R456
3.3
C439
0.0068
TO
PROCESS & Y/C
(Page4-21)
AY1
A. REC
TP401
TP402
R409
10
R459
1K
R410
10K
R404
82
R405 82
R406
82
D. REG_5V
GND
R411
4.7K
C403
Q403
UMW1N
R412
2.7K
Q404
DTA124EE
Q405
DTC144EE
R407
15K
C402
47/5.5
Q406
DTC144EE
Q407
DTC144EE
C409
680p
R421
82K
R414
2.2K
R415
1.3K
R416
1.3K
C404
1.0
C407
0.0015
R422
1.8K
C410
1/16
C405
0.0015
TO SYSCON
(Page4-14)
C411
0.01
R423
6.8K
R424
10K
R425
330K
R426
47
C406
0.0015
R417
8.2K
R418
100K
SA1
A. BIAS(L)
SA3
A. PB
SA2
SP(L)
SA4
A. MUTE
C412
47/5.5
C413
0.0033
R419
1K
C414
1/16
C408
R455
Vreg
BIAS
ALC_VR
-26dB
ALC_DET
IC401
BA7751AFS
C415
0.068
C420
47/4
R429
10K
C441
C423
22/6.3
C419
47/4
R428
1.5M
R430
22K
R458
R431
1K
C418
C417
C422
4.7/6.3
TO REAR
CN1
(Page4-33)
CN15
27
A. OUT
3
A. OUT
31
A. GND(OUT)
7
A. GND(OUT)

P4-19,20,21-a P4-19,20,21-b

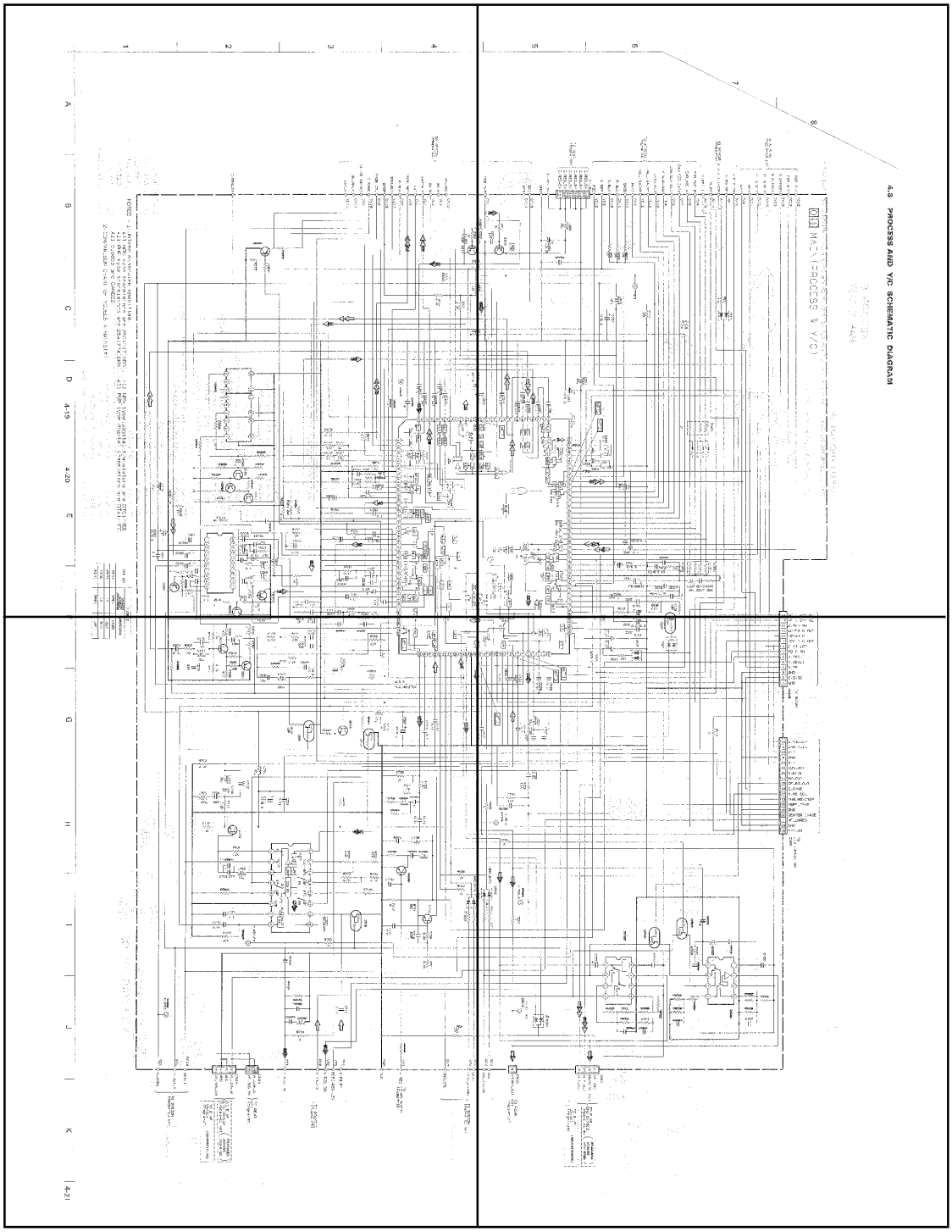

P4-19,20,21-c P4-19,20,21-d

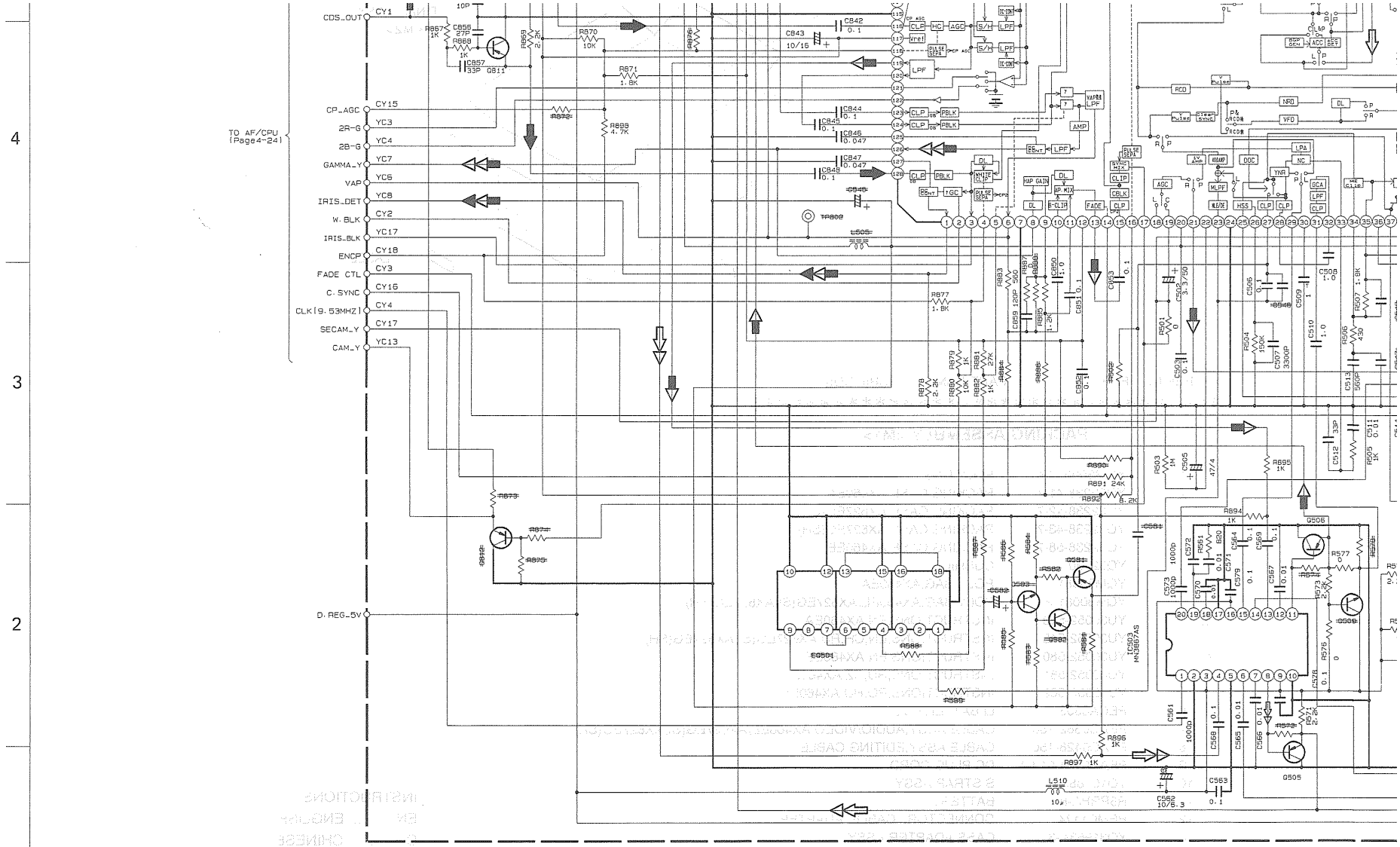

NOTES : 1. Unless otherwise specified.
All NPN type transistors are 2SC4617(QRS). All NPN type digital transistors are DTC144EE.
All PNP type transistors are 2SA1774(QRS). All PNP type digital transistors are DTA144EE.
All diodes are DAN222.

2. COMPARISON CHART OF MODELS & MARKS(#)

REF. NO	MODELS	
	AX460EA /AX460EE /AX627EG(S)	AX627EG(S)
Q504	OPEN	USED
R527	1K	820
R530	1K	820
R541	OPEN	USED

4.8 PROCESS AND Y/C SCHEMATIC DIAGRAM

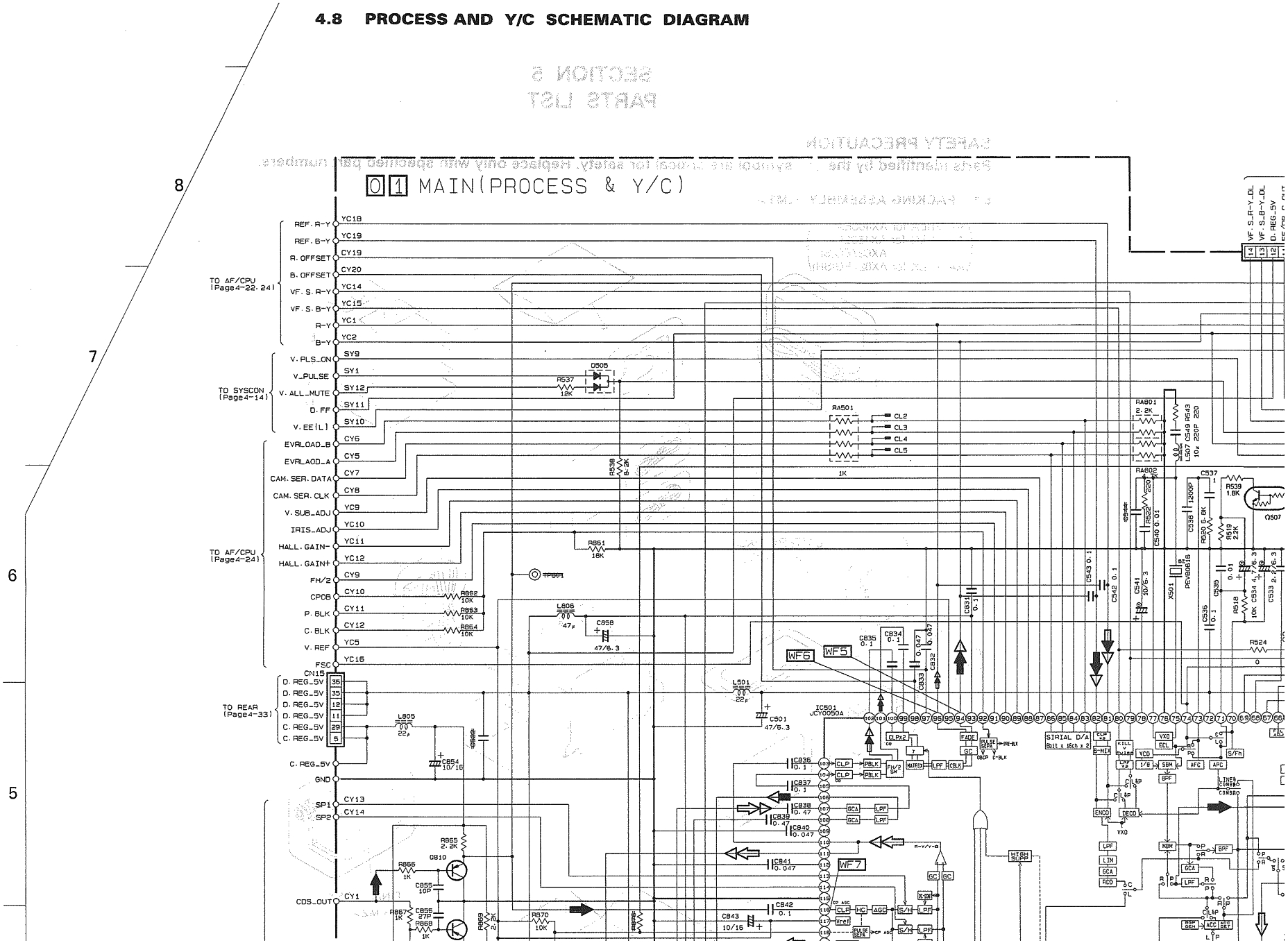

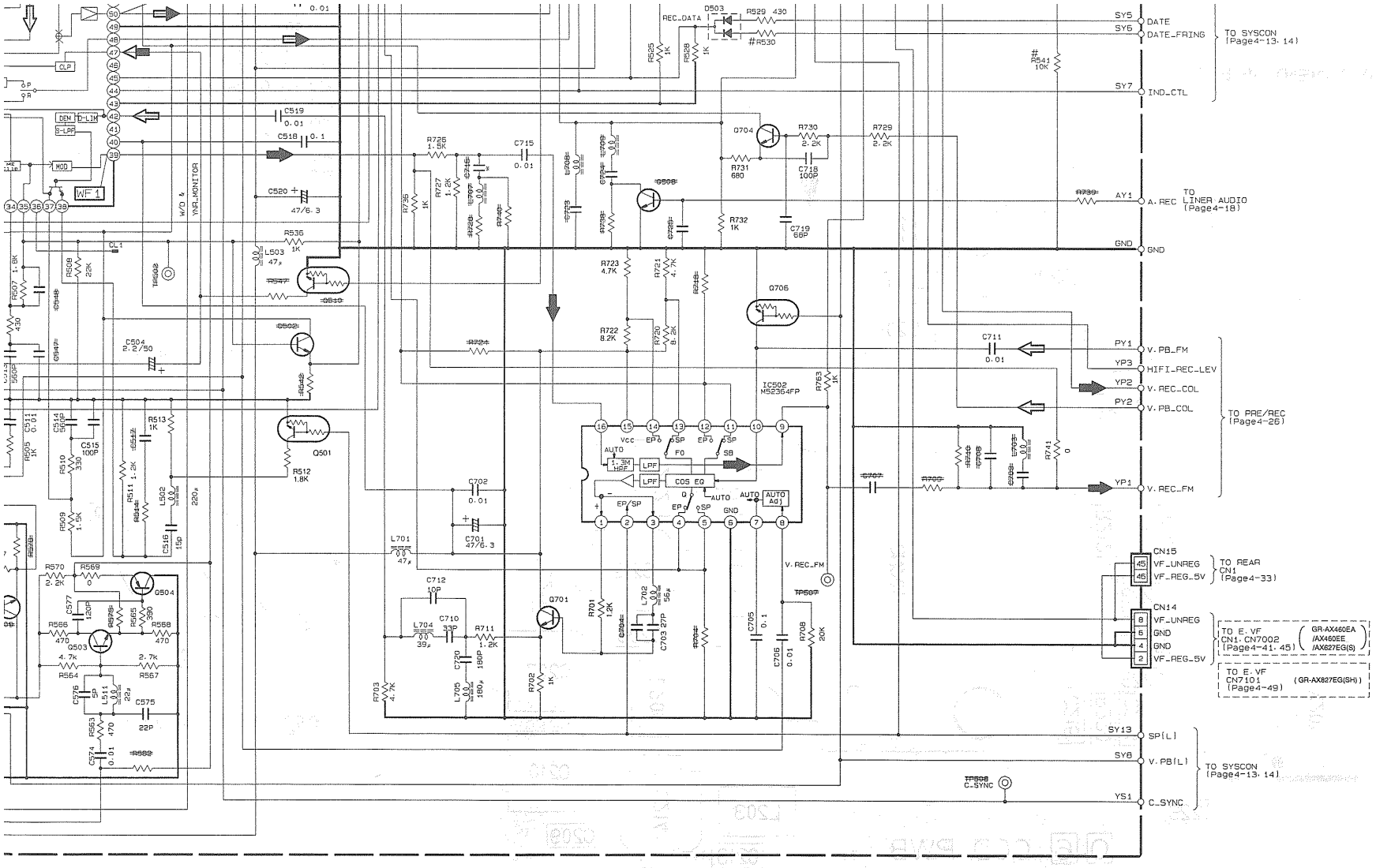

MODELS	
	AX627EG(SH)
	USED
	820
	820
	USED

F G H I J K

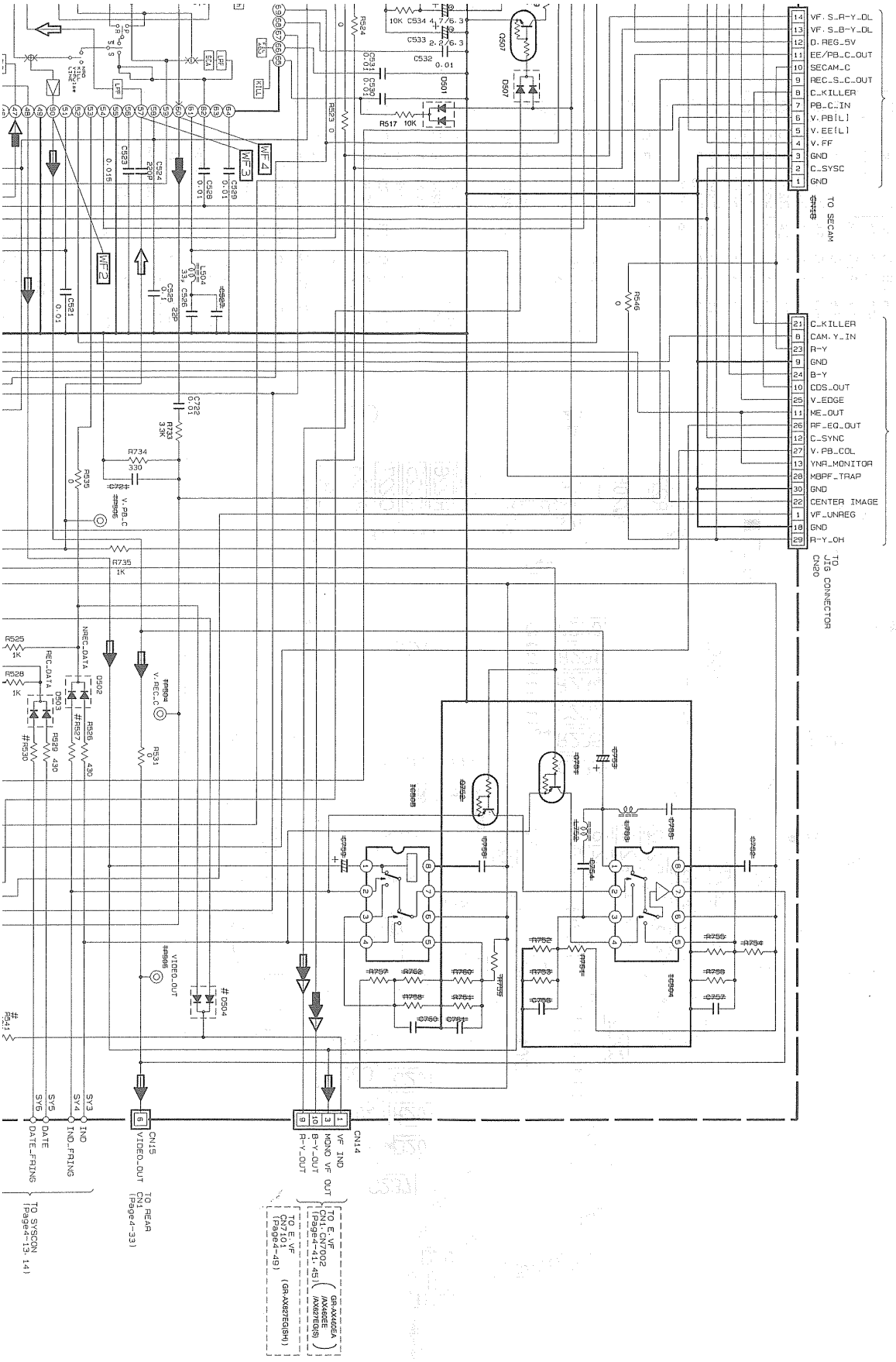
VF.S_R-Y_DL
VF.S_B-Y_DL
D.REG_5V
EE/PB_C_OUT
SECAM_C
REC_S_C_OUT
C_KILLER
PB_C_IN
V.PB[L]
V.EE[L]
V.FF
GND
C_SYSC
GND
TO SECAM
C_KILLER
CAM.Y_IN
R-Y
GND
B-Y
CDS_OUT
V_EDGE
ME_OUT
RF_EQ_OUT
C_SYNC
V.PB_COL
YNR_MONITOR
MBPF_TRAP
GND
CENTER IMAGE
VF_UNREG
GND
R-Y_OH
TO JIG CONNECTOR CN20
CN15
VIDEO_OUT
CN14
VF IND
MONO VF OUT
B-Y_OUT
R-Y_OUT
TO SYSCON (Page4-13, 14)
TO REAR CN1 (Page4-33)
TO E.VF CN1.CN7002 (Page4-41, 45)
TO E.VF CN7101 (Page4-49)
(GR-AX460EA /AX460EE /AX627EG(S))
(GR-AX627EG(SH))

P4-39,40.5-1-a

P4-39,40.5-1-b

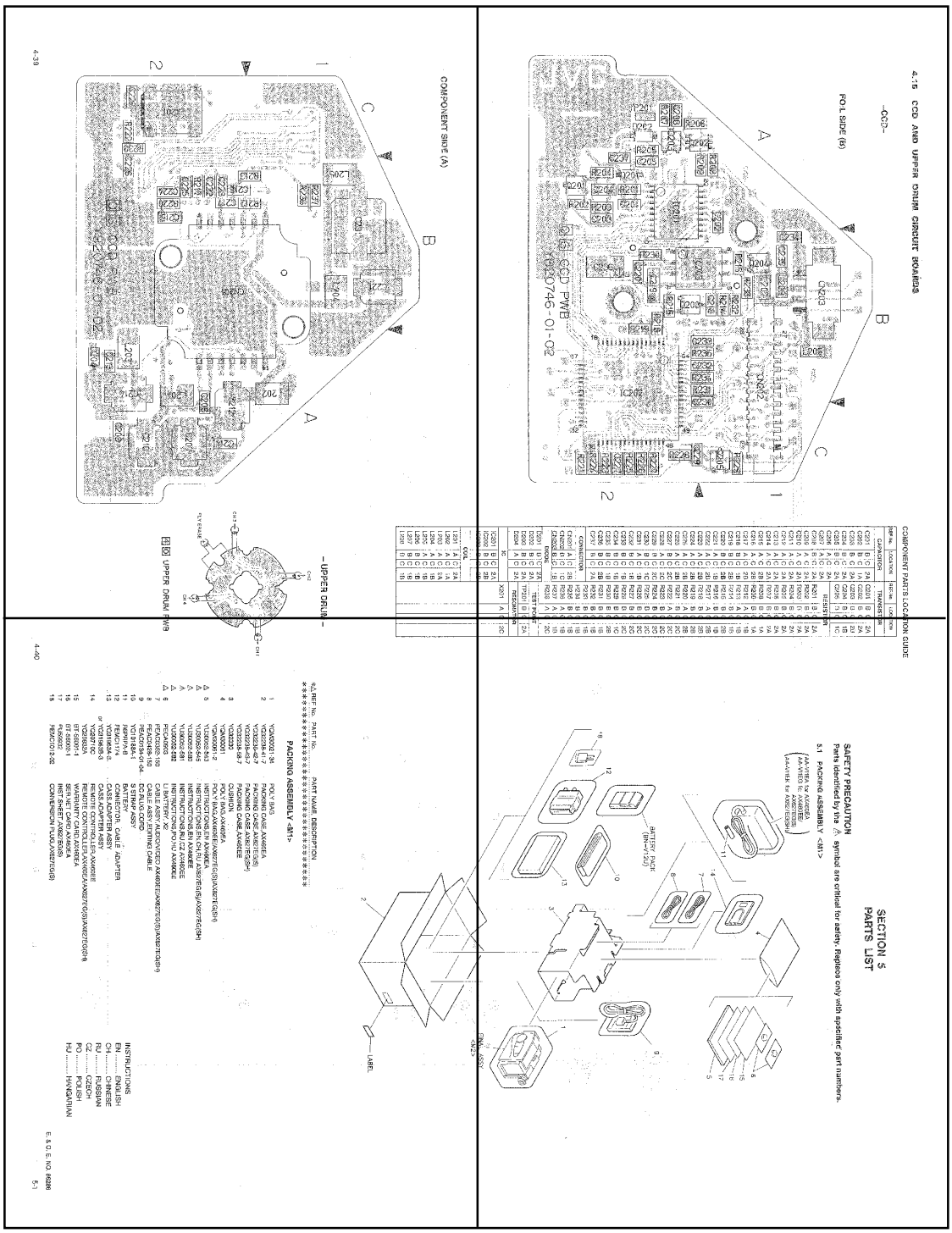

P4-39,40.5-1-c

P4-39,40.5-1-d

IC202	B	C	2B
IC203	B	C	2B
COIL			
L201	A	C	2A
L202	A	C	1A
L203	A	C	2A
L204	A	C	1B
L205	A	C	1B
L206	B	C	1B
L207	B	C	1B
L208	B	C	1B

COMPONENT SIDE (A)

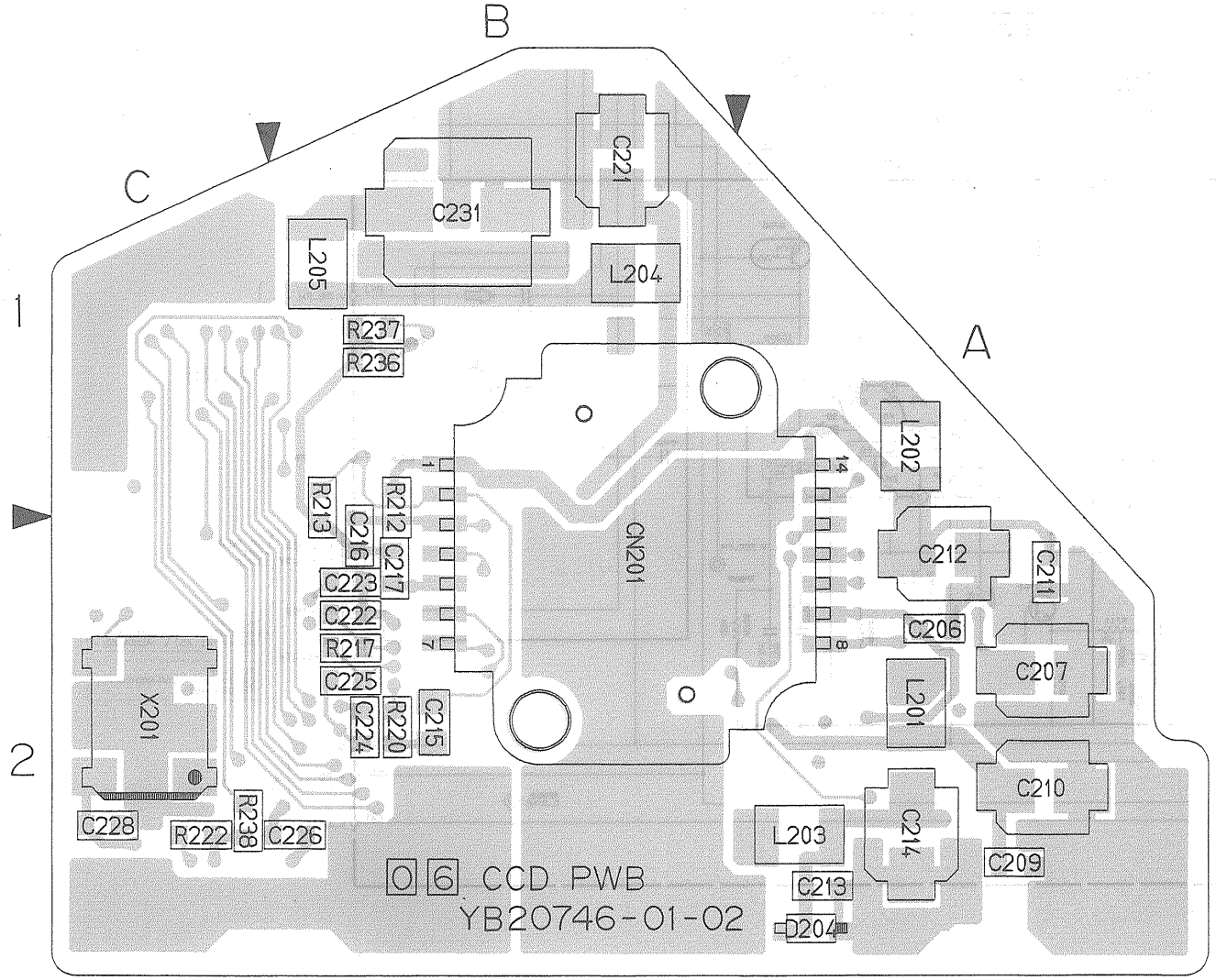

– UPPER DRUM –

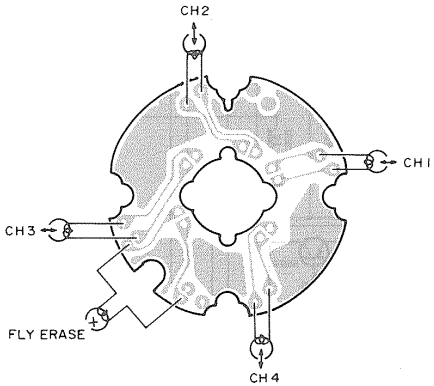

4 0 UPPER DRUM PWB

4.15 CCD AND UPPER DRUM CIRCUIT BOARDS

–CCD–

FOIL SIDE (B)

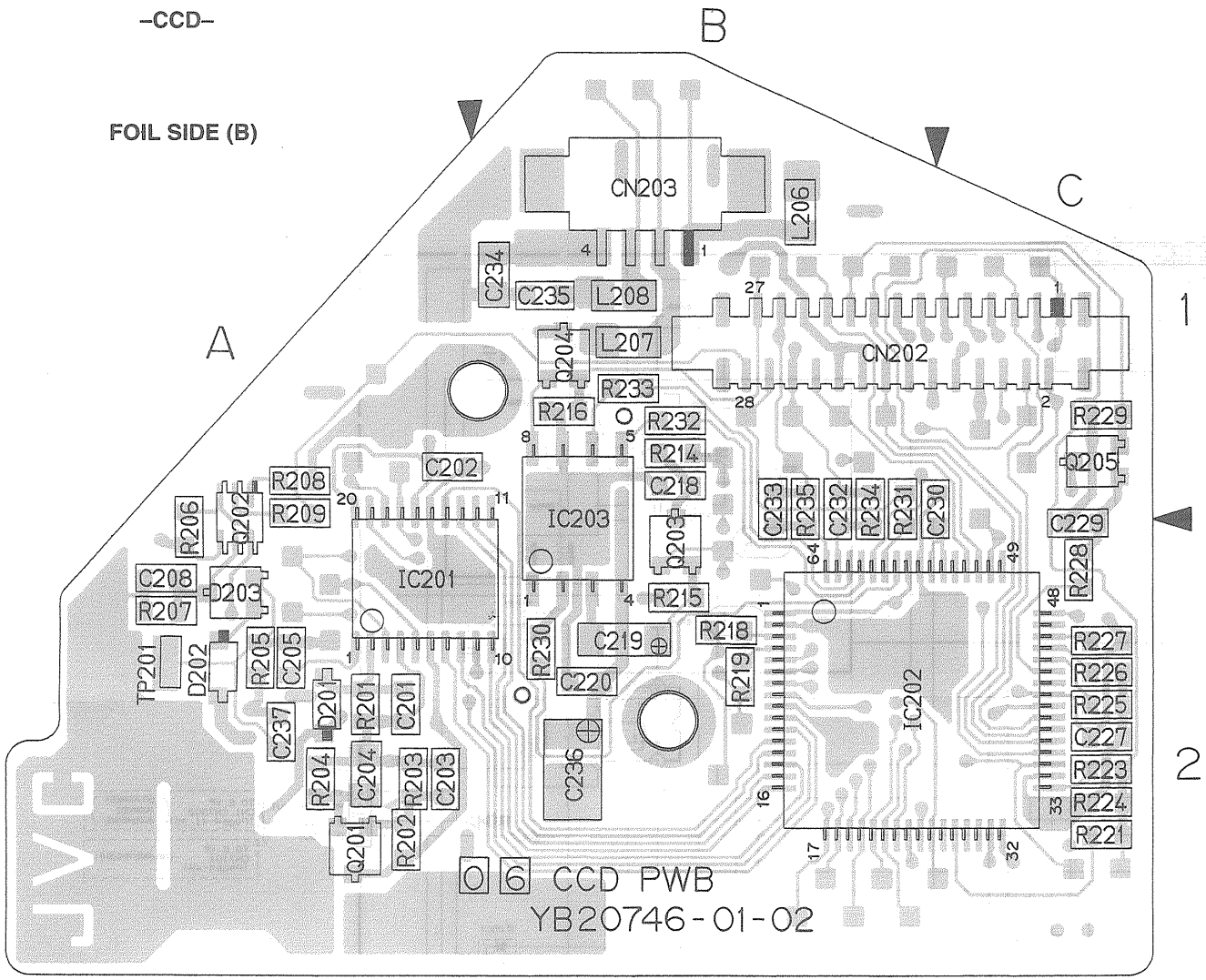

COMPONENT PARTS LOCATION GUIDE

REF.No.	LOCATION		
CAPACITOR			
C201	B	C	2A
C202	B	C	1A
C203	B	C	2A
C204	B	C	2A
C205	B	C	2A
C206	A	C	2A
C207	A	C	2A
C208	B	C	2A
C209	A	C	2A
C210	A	C	2A
C211	A	C	2A
C212	A	C	2A
C213	A	C	2A
C214	A	C	2A
C215	A	C	2B
C216	A	C	2B
C217	A	C	2B
C218	B	C	1B
C219	B	C	2B
C220	B	C	2B
C221	A	C	1B
C222	A	C	2B
C223	A	C	2B
C224	A	C	2B
C225	A	C	2B
C226	A	C	2B
C227	B	C	2C
C228	A	C	2C
C229	B	C	2C
C230	B	C	1C
C231	A	C	1B
C232	B	C	1B
C233	B	C	1B
C234	B	C	1B
C235	B	C	1B
C236	B	C	2B
C237	B	C	2A
CONNECTOR			
CN201	A	C	2B
CN202	B	C	1C
CN203	B	C	1B
DIODE			
D201	B	C	2A
D202	B	C	2A
D203	B	C	2A
D204	A	C	2A
IC			
IC201	B	C	2A
IC202	B	C	2B
IC203	B	C	2B
COIL			

REF.No.	LOCATION		
TRANSISTOR			
Q201	B	C	2A
Q202	B	C	2A
Q203	B	C	2B
Q204	B	C	1B
Q205	B	C	1C
RESISTOR			
R201	B	C	2A
R202	B	C	2A
R203	B	C	2A
R204	B	C	2A
R205	B	C	2A
R206	B	C	2A
R207	B	C	2A
R208	B	C	1A
R209	B	C	1A
R212	A	C	1B
R213	A	C	1B
R214	B	C	1B
R215	B	C	2B
R216	B	C	1B
R217	A	C	2B
R218	B	C	2B
R219	B	C	2B
R220	A	C	2B
R221	B	C	2C
R222	A	C	2C
R223	B	C	2C
R224	B	C	2C
R225	B	C	2C
R226	B	C	2C
R227	B	C	2C
R228	B	C	2C
R229	B	C	1C
R230	B	C	2B
R231	B	C	1B
R232	B	C	1B
R233	B	C	1B
R234	B	C	1B
R235	B	C	1B
R236	A	C	1B
R237	A	C	1B
R238	A	C	2C
TEST POINT			
TP201	B	C	2A
RESONATOR			
X201	A	C	2C

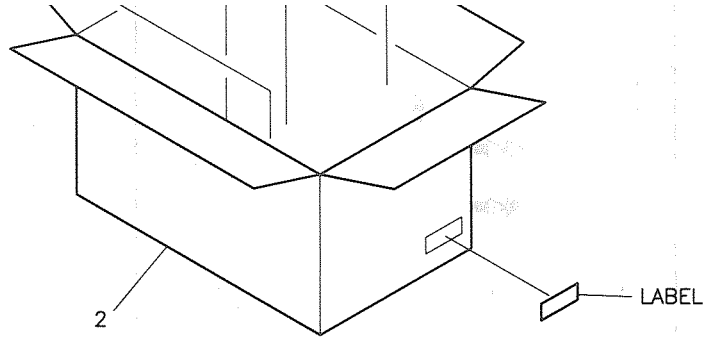

#⚠	REF No.	PART No.	PART NAME, DESCRIPTION

****

PACKING ASSEMBLY <M1>

	1	YQM30021-34	POLY BAG
	2	YQ32238-41-7	PACKING CASE,AX460EA
		YQ32238-42-7	PACKING CASE,AX627EG(S)
		YQ32238-43-7	PACKING CASE,AX827EG(SH)
		YQ32238-58-7	PACKING CASE,AX460EE
	3	YQ32330	CUSHION
	4	YQM30061	POLY BAG,AX460EA
		YQM30061-2	POLY BAG,AX460EE/AX627EG(S)/AX827EG(SH)
⚠	5	YU30052-543	INSTRUCTIONS,EN AX460EA
⚠		YU30052-545	INSTRUCTIONS,EN,CH,RU AX627EG(S)/AX827EG(SH)
⚠		YU30052-580	INSTRUCTIONS,EN AX460EE
⚠		YU30052-581	INSTRUCTIONS,RU,CZ AX460EE
⚠		YU30052-582	INSTRUCTIONS,PO,HU AX460EE
⚠	6	PECA0903	LI BATTERY, X2
	7	PEAC0362-150	CABLE ASSY,AUDIO/VIDEO AX460EE/AX627EG(S)/AX827EG(SH)
	8	PEAC0428-150	CABLE ASSY,EDITING CABLE
	9	PEAC0134-01-04	DC PLUG CORD
	10	YQ10188A-1	S STRAP ASSY
	11	R6PRPA-B	BATTERY
	12	PEMC1174	CONNECTOR, CABLE ADAPTER
	13	YQ31963A-3	CASS.ADAPTER ASSY
	or	YQ31963B-3	CASS.ADAPTER ASSY
	14	YQ20710C	REMOTE CONTROLLER,AX460EE
		YQ20932A	REMOTE CONTROLLER,AX460EA/AX627EG(S)/AX827EG(SH)
	15	BT-56001-1	WARRANTY CARD,AX460EA
	16	BT-56002-1	SER.NET CARD,AX460EA
	17	PU59932	INST.SHEET,AX627EG(S)
	18	PEMC1012-02	CONVERSION PLUG,AX627EG(S)

INSTRUCTIONS
EN ..... ENGLISH
CH ..... CHINESE
RU ..... RUSSIAN
CZ ..... CZECH
PO ..... POLISH
HU ..... HANGARIAN

E. & O. E. NO. 86286

P4-39,40.5-1-c

SECTION 5
PARTS LIST

SAFETY PRECAUTION

Parts identified by the ⚠ symbol are critical for safety. Replace only with specified part numbers.

5.1 PACKING ASSEMBLY <M1>

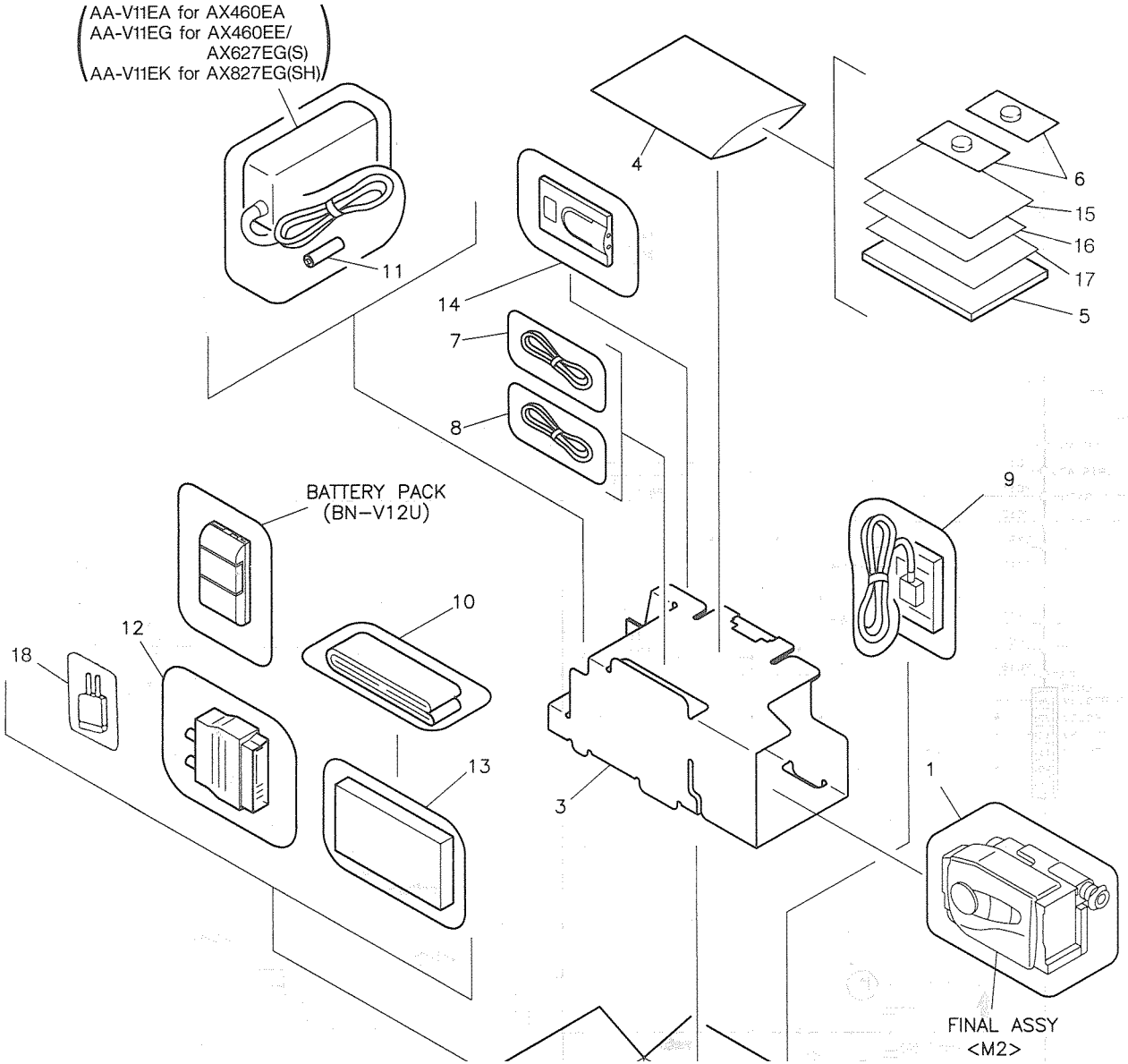

JVC

VICTOR COMPANY OF JAPAN, LIMITED

Printed in Japan
9603 (VP-M09A5/A5C)
GR-AX460EA/AX460EE/
AX627EG(S)/AX827EG(SH)